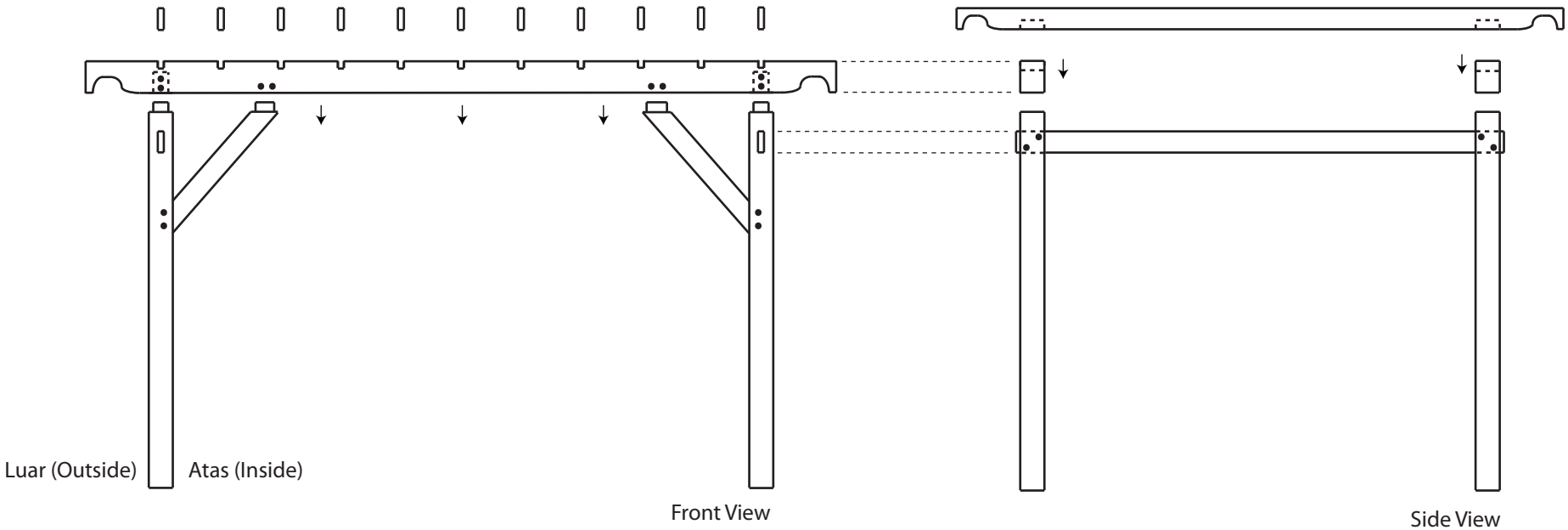

Pergola #1: 10 pieces
Pergola #3: 8 pieces

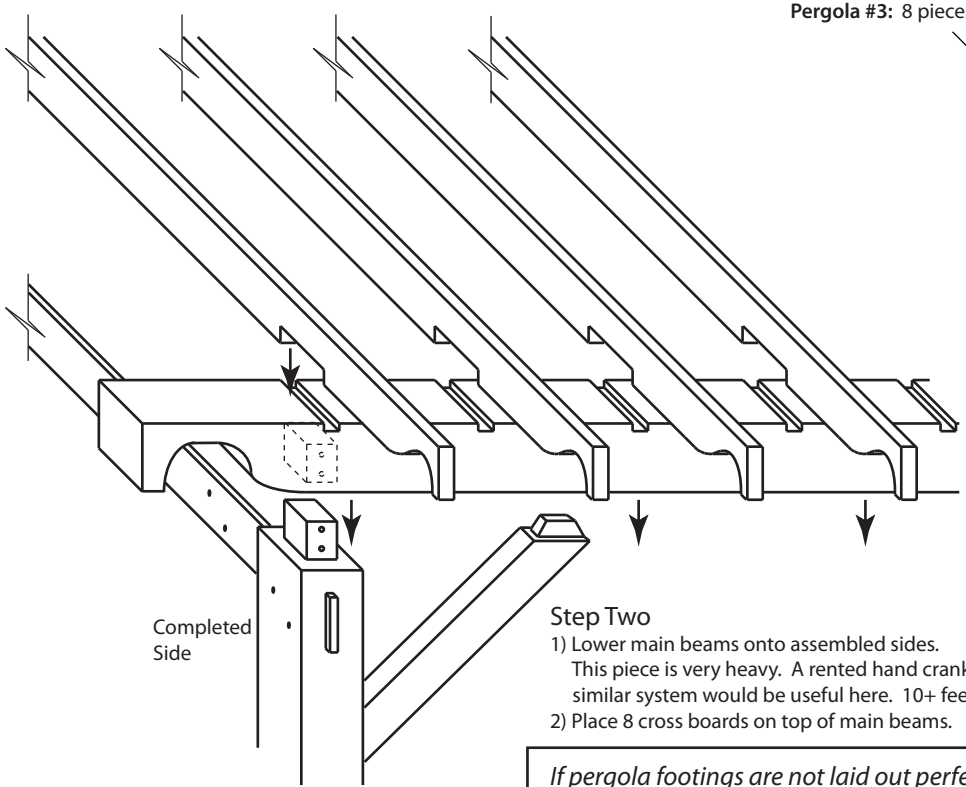

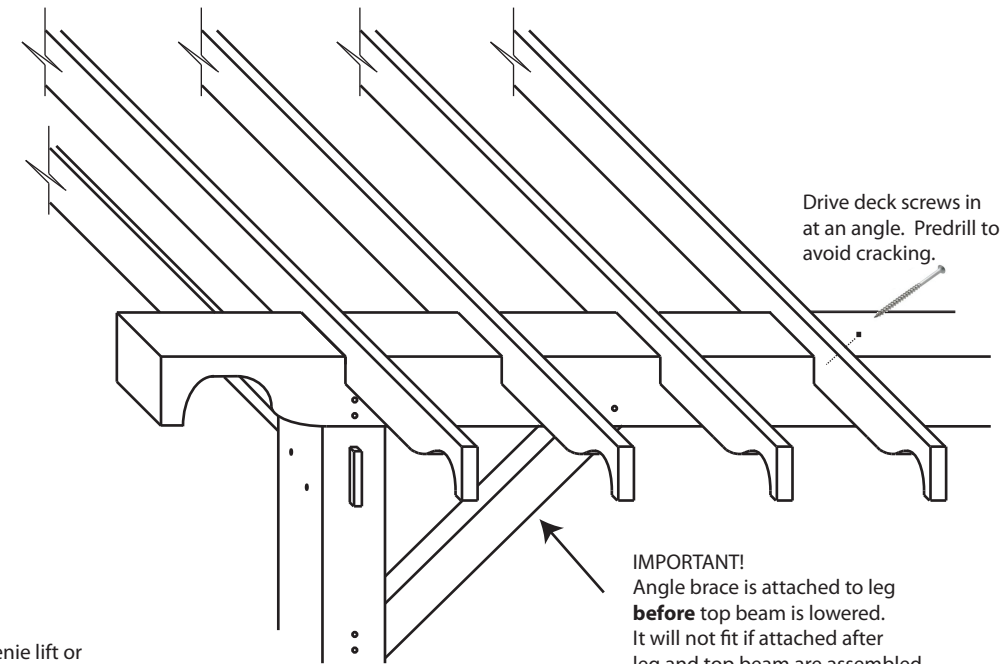

IMPORTANT!
Angle brace is attached to leg **before** top beam is lowered.
It will not fit if attached after leg and top beam are assembled.

Step Two

1) Lower main beams onto assembled sides.
   This piece is very heavy. A rented hand crank genie lift or similar system would be useful here. 10+ feet lift is needed.
2) Place 8 cross boards on top of main beams.

If pergola footings are not laid out perfectly square and level, top cross boards will not fit!